2W UI30/5.5 SH-UI3005 Series Encapsulation Transformer

FEATURES

Frequency 50/60Hz
Potted under vacuum
Split-bobbin
Temperature class @ 70°C/B
Fixing material for □2.5mm
Self-tapping screws: DIN 7513 (M 3x8)
Sheet-metal screws: DIN 7971 (2.9x6.5)

Bulk packaging is standard.
Custom design available.

Medical equipments.
Industrial equipments.
Industrial controls.
Test equipments.
Industrial computers.
Avionics & telecom.

RoHS REACH

Additional information:
We reserve the right to make technical changes or modify the contents of this document without prior notice.
SHARE Ltd. Does not accept any responsibility what so ever for potential errors or possible lack of information in this document.
We can offer that even custom-made transformers will be covered by approvals from UL, CSA, KEMA, etc., but we will be happy to assist you in implementing them.
New approvals may be required.

1

LINER POWER

PHYSICAL CHARACTERISTICS(unit:mm)

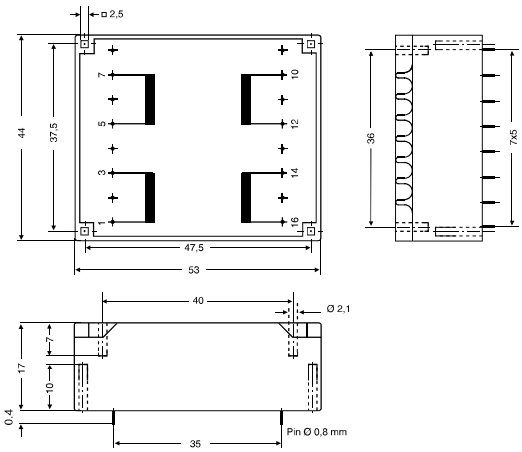

ELECTRICAL CHARACTERISTICS AT 25°C

Part Number	Primary (V)	Secondary (V/mA)	No-load voltage(V)	Fig.
SH-UI300507	2*115	2*6/166	2*10.2	1
SH-UI300508	2*115	2*9/111	2*15.3	1
SH-UI300509	2*115	2*12/83	2*20.4	1
SH-UI300510	2*115	2*15/66	2*25.5	1
SH-UI300511	2*115	2*18/55	2*30.6	1
SH-UI300512	2*115	2*24/42	2*40.8	1

TECHNICAL INFORMATION

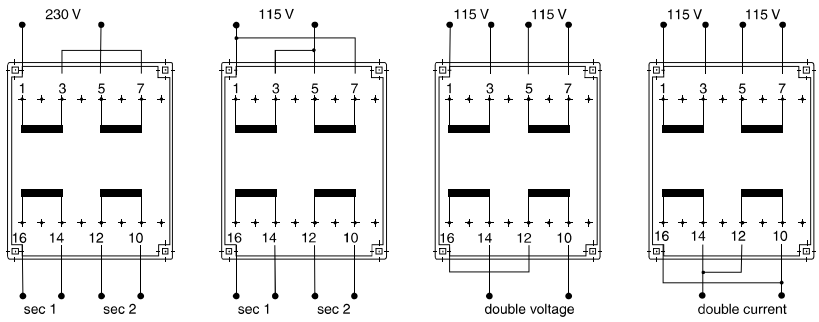

Add: 4th Floor, Lie Sheng Building, Yu Yue Village , San Zao Town
Zhuhai, Guangdong, China
Tel: +86 756 7512727 Fax: +86 756 7512737
E-mail: share_eu@secl.cc sales@secl.cc http://www.secl.cc